IP800-SERIES

INSERTION PADDLEWHEEL FLOW SENSOR

Seametrics

APPLICATIONS

Industrial water/wastewater treatment

Cooling water monitoring

Industrial fluid control

Chemical proportioning

Features

- Low-friction, long-life jewel bearings
- One moving part
- **Fully field-repairable**
- Choice of materials for compatibility with a variety of chemicals
- Fits 1/2" to 8" pipe
- **Fixed depth in fitting ensures** proper placement in pipe

The IP800-Series are impeller (or "paddlewheel") insertion meters designed for use with a wide variety of liquids in pipe sizes 1/2" to 8". Sensors are available in brass, 316 stainless steel, PVC, and polypropylene. Bodies are machined from a solid rod for maximum precision. High-quality jewel bearings and nickel-bound tungsten carbide shafts are used for extreme low friction and long life. Low-flow performance is good, although other Seametrics flow meters are recommended where extremely low flows are being measured.

The rotation of the rotor is detected by a non-drag Hall-effect sensor. Output is a current-sinking pulse, which can be sent long distances (up to 2,000 feet) without a transmitter. This signal can be connected directly to PLC's, counters, and computer cards, as well as a variety of Seametrics controls and displays.

Seametrics IP meters are ideal for chemical proportioning applications. If no display is required, a simple divider such as the PD10 provides adjustable pump pacing. For rate and total display, a modular system of electronics can be installed directly on the flow sensor or mounted remotely. The FT430 (externally powered with pulse), FT440 (loop powered), and FT450 (battery powered) all provide digital rate and total displays, as well as a programmable pulse; the FT440 also provides a 4-20 mA analog output. The AO55 blind analog transmitter can be used to convert to a 4-20 mA output. Electronic modules can be wall- or meter-mounted. (Note: PD10 available only as wall mounted unit.) IP meters are also compatible with the DL76 data logger and FT520 batch processor.

The IP800-Series require special fittings that ensure correct depth placement in the pipe. Fittings come in a variety of materials for compatibility with specific applications. Tee fittings are individually wet-calibrated at the factory and marked with the K-factor (pulses per gallon). Saddle fittings must be field-installed on the pipe and do not come wet-calibrated. K-factors for saddles are based on factory-testing.

Contact Your Supplier

TechnoFlo Your Flow Meter Source
PO Box 1448 Porterville, CA 93258
• 559-783-1207

Features

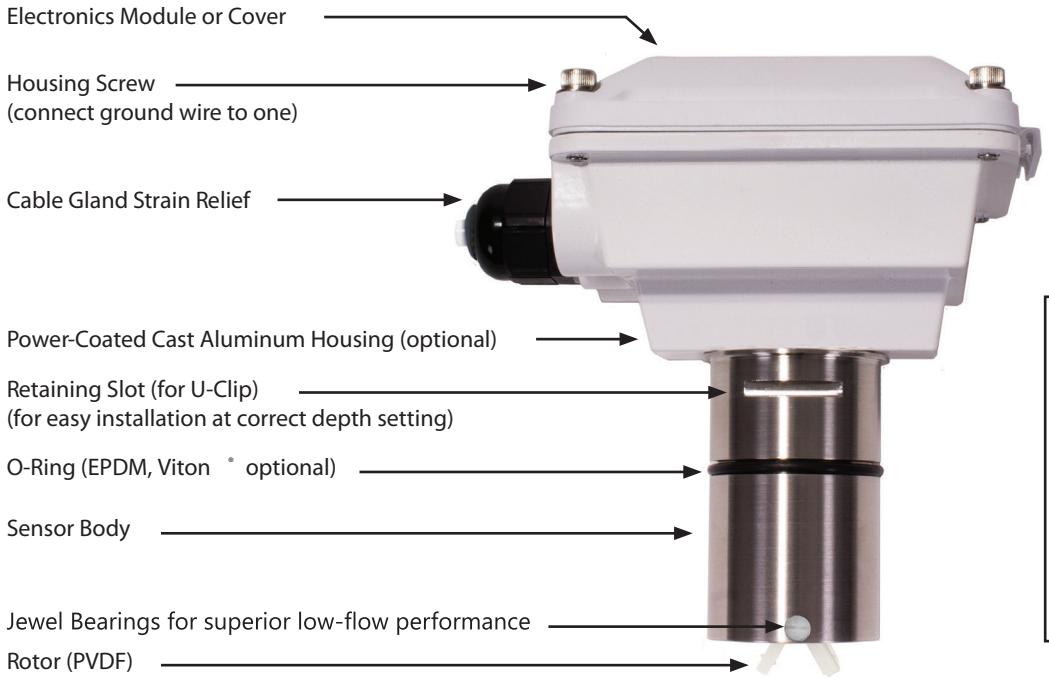

High Pressure

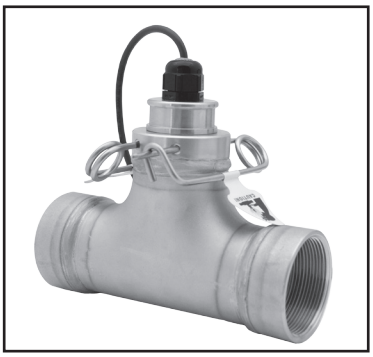

Specifications*

Pipe Size		1/2″ to 8″		
Power		Low Power: 6-36 Vdc/< 2 mA	Micropowered (-04 Option):	3.1-16 Vdc/60 µA @ 3.6 Vdc
Sensor		Low Power: Digital Magnetoresistive	Micropowered (-04 Option):	Giant Magnetoresistance (GMR)
Materials	Optional Housing	Powder-coated cast aluminum		
	Sensor Body	Brass, 316 Stainless Steel, PVC, or Polypropylene		
	O-ring	EPDM (Viton® optional)		
	Rotor	PVDF (Kynar®)		
	Shaft	Kynar® /Tungsten Carbide (Kynar® /Ceramic or Kynar®/Silicon Carbide optional)		
	Bearings	Ruby jewel		
Maximum		Brass	316 Stainless Steel	PVC or Polypropylene (See Pressure vs. Temp. Chart)
	Pressure	200 psi (14 bar)	200 psi (14 bar)	175 psi (12 bar) @ 75˚ F (24˚ C)
	High Pressure	Not available	400 psi (28 bar)	Not available
	Temperature	200˚ F (93˚ C)	200˚ F (93˚ C)	130˚ F (55˚ C)
Flow Velocity		0.3 to 30 ft/sec (0.9 to 9.14 m/sec)		
Accuracy		± 1.5% of full scale		
Output Transistor Maximum Current Sinking		150mA (low power version only)		
Cable		#22 AWG 3-con, 18′ (6m); 2,000′ (610m) maximum cable run Note: 50′ (15m) maximum for battery powered or micropowered versions.		
Environmental		See meter mounted electronics specification for rating		
Regulatory		CE Mark		

**Specifications subject to change*

Kynar is a registered trademark of Arkema, Inc., Viton is a registered trademark of DuPont Corporation.

Flow Range

Nominal Pipe Size	½″	¾″	1″	1½″	2″	3″	4″	6″	8″
Min GPM Min LPM	0.28 1.06	0.5 1.89	0.8 3.03	1.9 7.2	3.1 11.7	6.9 26.1	12 45	27 102	46.8 177
Max GPM Max LPM	28 106	50 189	80 302	190 719	314 1188	691 2615	1190 4504	2700 10221	4680 17716

Dimensions

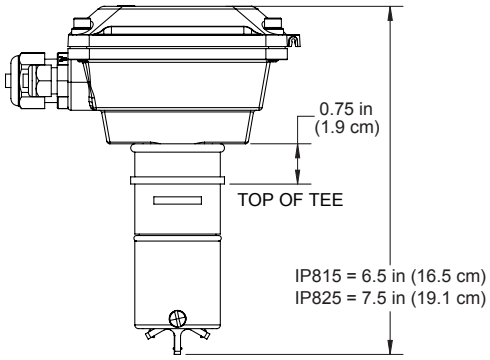

NOTE:
Housing Optional

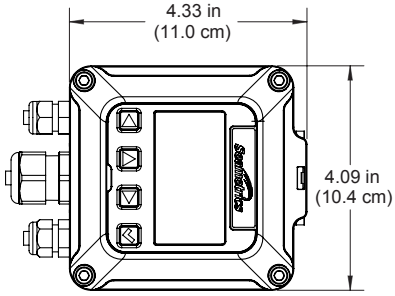

Available Fittings

	Tee	Saddle	Weld	Braze	Sweat Tee
Bronze	1/2"- 4"	3"- 4"	x	3"- 8"	1/2"- 4"
PVC	1/2"- 2"	3"- 8"	x	x	x
Stainless Steel	1/2"- 2" 304SS	x	3"- 8" 316SS	x	x
Carbon Steel	1/2"- 2"	x	3"- 8"	x	x
Ductile Iron	x	3"- 8"	x	x	x

Pressure vs. Temperature (PVC/Polypro)

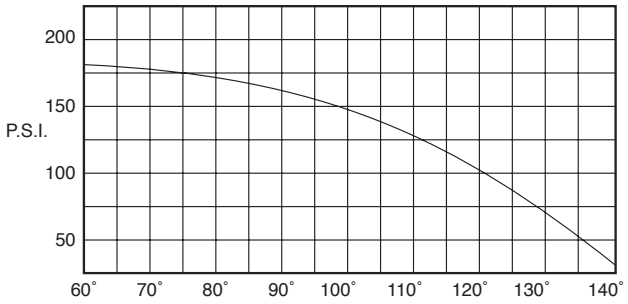

PVC Block Tee Fitting (Figure 1)

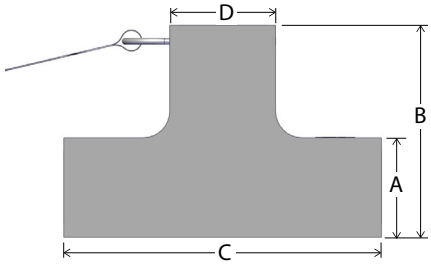

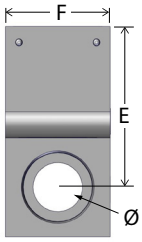

PVC Tee Fittings (Figure 2)

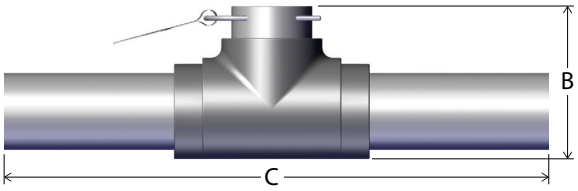

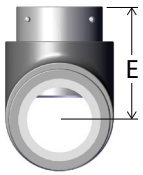

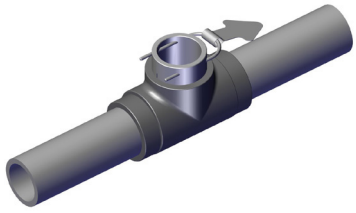

Figure	Pipe Size	A	B	C	D	E	F	Ø
1	1/2"	1.50" (3.81 cm)	3.80" (9.65 cm)	6.00" (15.24 cm)	2.00" (5.08 cm)	3.15" (8.00 cm)	2.00" (5.08 cm)	0.83" (2.11 cm)
1	3/4"	1.90" (4.83 cm)	4.00" (10.16 cm)	6.00" (15.24 cm)	2.00" (5.08 cm)	3.05" (7.75 cm)	2.00" (5.08 cm)	1.06" (2.69 cm)
1	1"	1.88" (4.77 cm)	4.00" (10.16 cm)	6.00" (15.24 cm)	2.00" (5.08 cm)	3.06" (7.77 cm)	2.00" (5.08 cm)	1.325" (3.36 cm)
2	1 1/2"	—	4.50" (11.43 cm)	19.4" (49.28 cm) (nominal)	—	3.35" (8.51 cm)	—	—
2	2"	—	4.90" (12.45 cm)	19.9" (50.55 cm) (nominal)	—	3.45" (8.76 cm)	—	—

How to Order

	Description	Size	Sensor Material	Options
Sensor Only	Sensor Only.	½" - 3" = IP810 4" - 8" = IP820	Brass = B 316 Stainless Steel = S PVC = P Polypro = Y	Rotor with Ceramic Shaft, PVDF, Kynar® = -01 Micropower Pickup = -04 Standard Power, LMI 4-pin Connector = -06 Standard Power, Seametrics Control Connector = -07 *Immersible = -40 Viton® O-Ring = -60 Rotor with Kynar®/Silicon Carbide Shaft = -68 Roytronic® Series A Pump 5-pin Connector = -106 **High Pressure (Stainless Only) = -HP
AO55 Mounted on Sensor	Blind 4-20 mA analog transmitter (AO55) mounted on the sensor.	½" - 3" = IP812 4" - 8" = IP822	Brass = B 316 Stainless Steel = S PVC = P Polypro = Y	Rotor with Ceramic Shaft, PVDF, Kynar® = -01 Standard Power, LMI 4-pin Connector = -06 Viton® O-Ring = -60 Rotor with Kynar®/Silicon Carbide Shaft = -68 Roytronic® Series A Pump 5-pin Connector = -106 **High Pressure (Stainless Only) = -HP
FT430 Mounted on Sensor	Rate & total indicator with pulse, externally powered (FT430) mounted on the sensor.	½" - 3" = IP813 4" - 8" = IP823	Brass = B 316 Stainless Steel = S PVC = P Polypro = Y	Rotor with Ceramic Shaft, PVDF, Kynar® = -01 Tamper Evident Kit = -32 Viton® O-Ring = -60 Non-resettable Total = -64 Rotor with Kynar®/Silicon Carbide Shaft = -68 Hinged Display Cover = -126
DL76 Mounted on Sensor	Data logger (DL76) mounted on the sensor.	½" - 3" = IP816 4" - 8" = IP826	Brass = B 316 Stainless Steel = S PVC = P Polypro = Y	Rotor with Ceramic Shaft, PVDF, Kynar® = -01 Micropower Pickup = -04 Tamper Evident Kit = -32 Viton® O-Ring = -60 Rotor with Kynar®/Silicon Carbide Shaft = -68 **High Pressure (Stainless Only) = -HP
FT450 Mounted on Sensor	Rate & total indicator with pulse, battery powered (FT450) mounted on the sensor.	½" - 3" = IP817 4" - 8" = IP827	Brass = B 316 Stainless Steel = S PVC = P Polypro = Y	Rotor with Ceramic Shaft, PVDF, Kynar® = -01 Tamper Evident Kit = -32 Viton® O-Ring = -60 Non-resettable Total = -64 Rotor with Kynar®/Silicon Carbide Shaft = -68 Hinged Display Cover = -126
FT440 Mounted on Sensor	Rate & total indicator with pulse & 4-20 mA output, loop powered (FT440) mounted on the sensor.	½" - 3" = IP819 4" - 8" = IP829	Brass = B 316 Stainless Steel = S PVC = P Polypro = Y	Rotor with Ceramic Shaft, PVDF, Kynar® = -01 Tamper Evident Kit = -32 Viton® O-Ring = -60 Non-resettable Total = -64 Rotor with Kynar®/Silicon Carbide Shaft = -68 Hinged Display Cover = -126

* Immersible to maximum of 3 ft (1m), up to 2 weeks
**Requires appropriate fitting.*
Kynar is a registered trademark of Arkema, Inc. Roytronic is a registered trademark of Milton Roy Company. Viton is a registered trademark of DuPont Corporation.

TechnoFlo Your Flow Meter Source
PO Box 1448 Porterville, CA 93258
• 559-783-1207